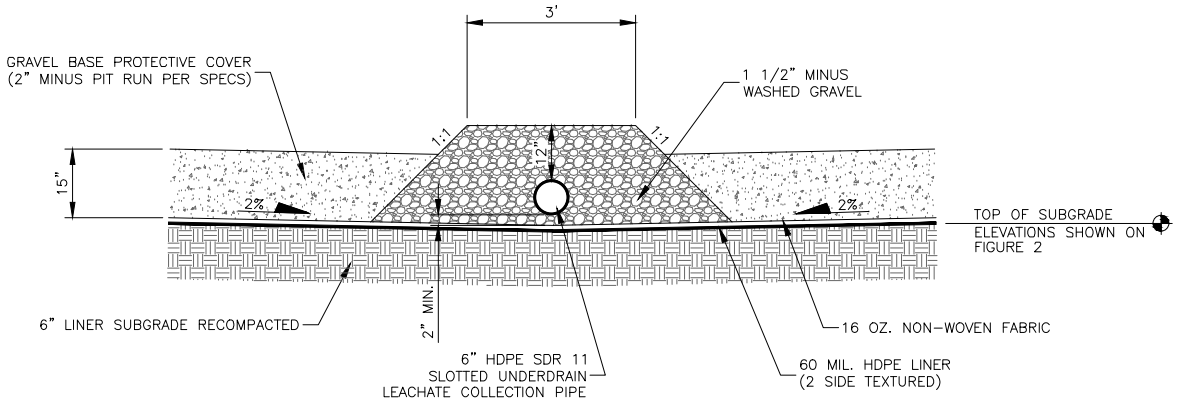

F:\1-10249-L&C Co. Ph 3 LF Exp\CADD 1-10249\Exhibits\1-10249-AltLiner-Fig04.dwg

GreatWest engineering

Figure 4
Typical Base Liner/Leachate Collection Lateral Cross Section

LEWIS AND CLARK COUNTY LANDFILL